REVISIONS			
REV	DESCRIPTION	DATE	APPROVED

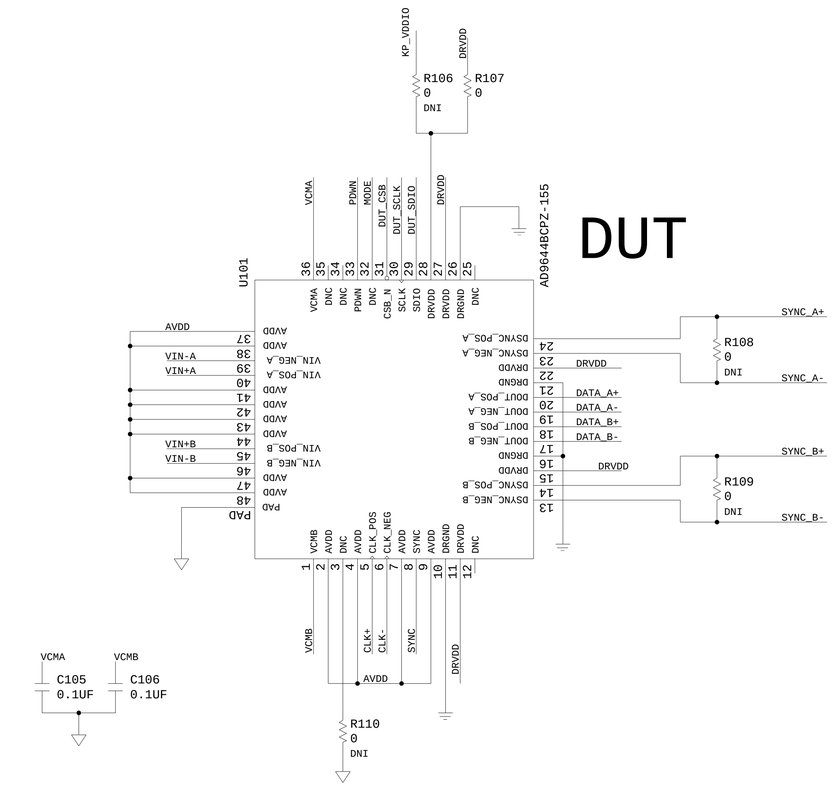

LAYOUT: DECOUPLING QUANTITY MAY VARY LAYOUT DEPENDING

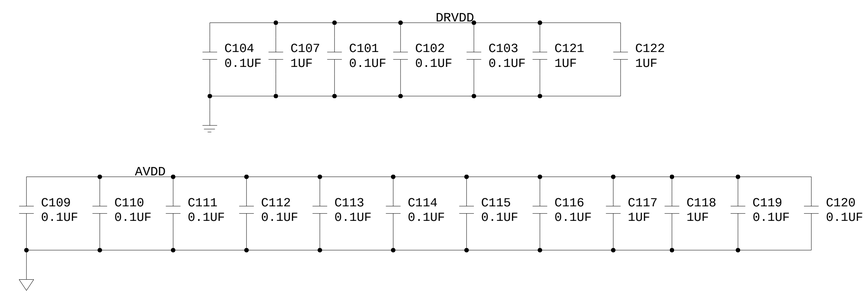

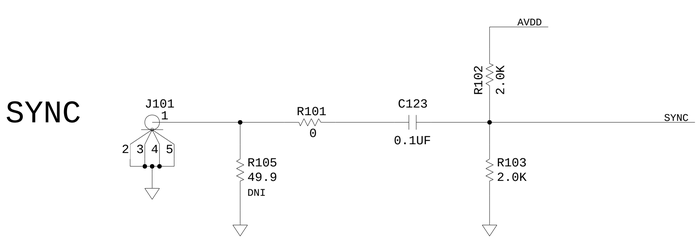

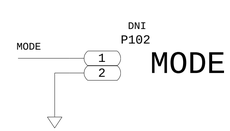

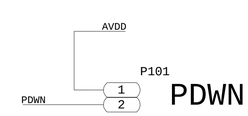

ANALOG DEVICES

SCHEMATIC

<DRAWING_TITLE_HEADER>
AD9644
CUSTOMER BOARD

THIS DRAWING IS THE PROPERTY OF ANALOG DEVICES INC. IT IS NOT TO BE REPRODUCED OR COPIED, IN WHOLE OR IN PART, OR USED IN FURNISHING INFORMATION TO OTHERS, OR FOR ANY OTHER PURPOSE DETRIMENTAL TO THE INTERESTS OF ANALOG DEVICES.
THE EQUIPMENT SHOWN HEREON MAY BE PROTECTED BY PATENTS OWNED OR CONTROLLED BY OWNED ANALOG DEVICES.

DESIGN VIEW	DRAWING NO.	REV
<DESIGN_VIEW>	9644CE01	A

PTD ENGINEER	SIZE	SCALE	SHEET 1 OF 6
-	D	NONE	

POWER

REVISIONS			
REV	DESCRIPTION	DATE	APPROVED

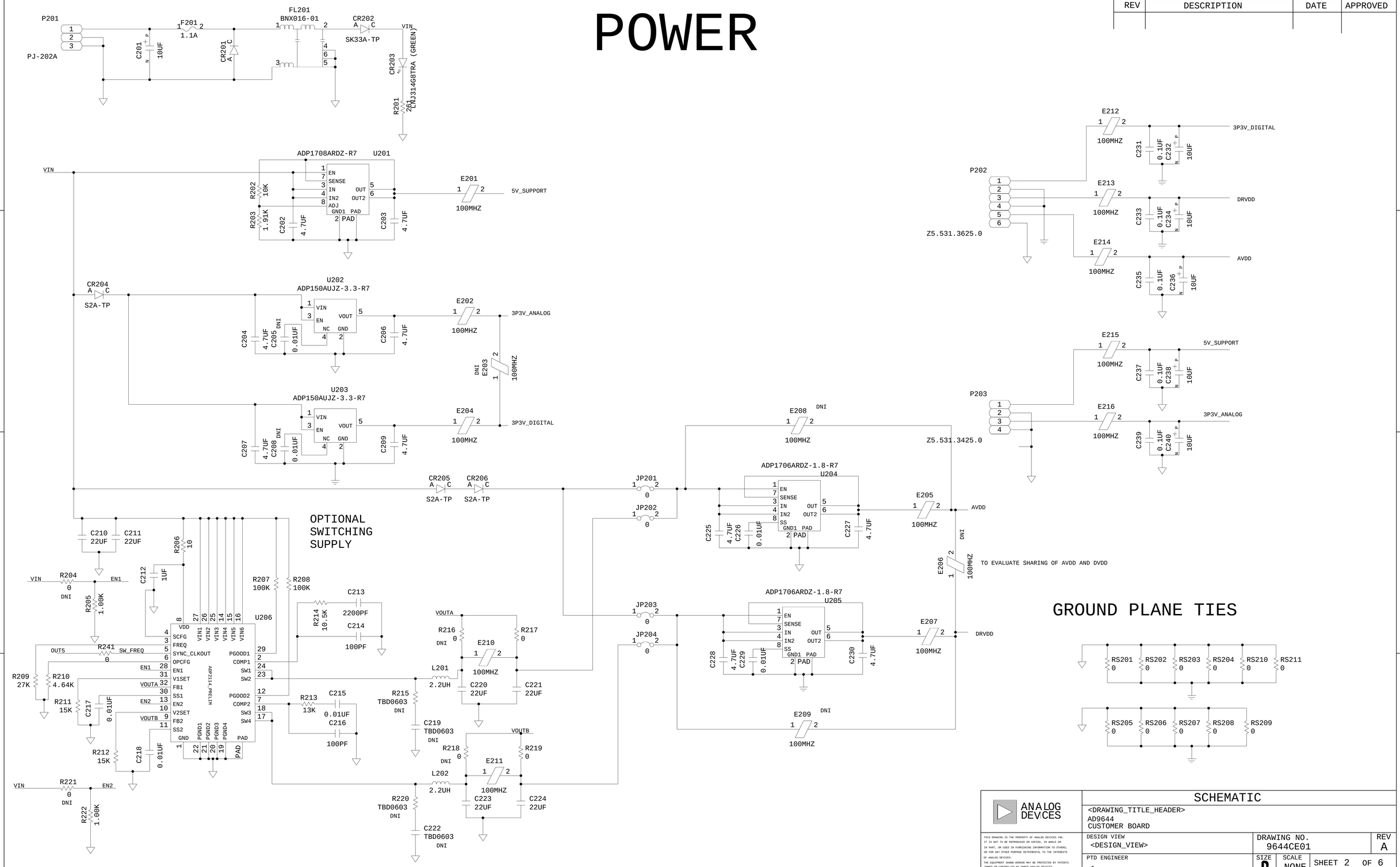

ANALOG DEVICES

THIS DRAWING IS THE PROPERTY OF ANALOG DEVICES INC.
IT IS NOT TO BE REPRODUCED OR COPIED, IN WHOLE OR
IN PART, OR USED IN FURNISHING INFORMATION TO OTHERS,
OR FOR ANY OTHER PURPOSE DETRIMENTAL TO THE INTERESTS
OF ANALOG DEVICES.
THE EQUIPMENT SHOWN HEREON MAY BE PROTECTED BY PATENTS
OWNED OR CONTROLLED BY OWNED ANALOG DEVICES.

SCHEMATIC

<DRAWING_TITLE_HEADER>
AD9644
CUSTOMER BOARD

DESIGN VIEW	DRAWING NO.	REV
<DESIGN_VIEW>	9644CE01	A
PTD ENGINEER: -	SIZE D / SCALE NONE	SHEET 2 OF 6

REVISIONS			
REV	DESCRIPTION	DATE	APPROVED

ANALOG INPUT

PASSIVE PATH A

AIN_A

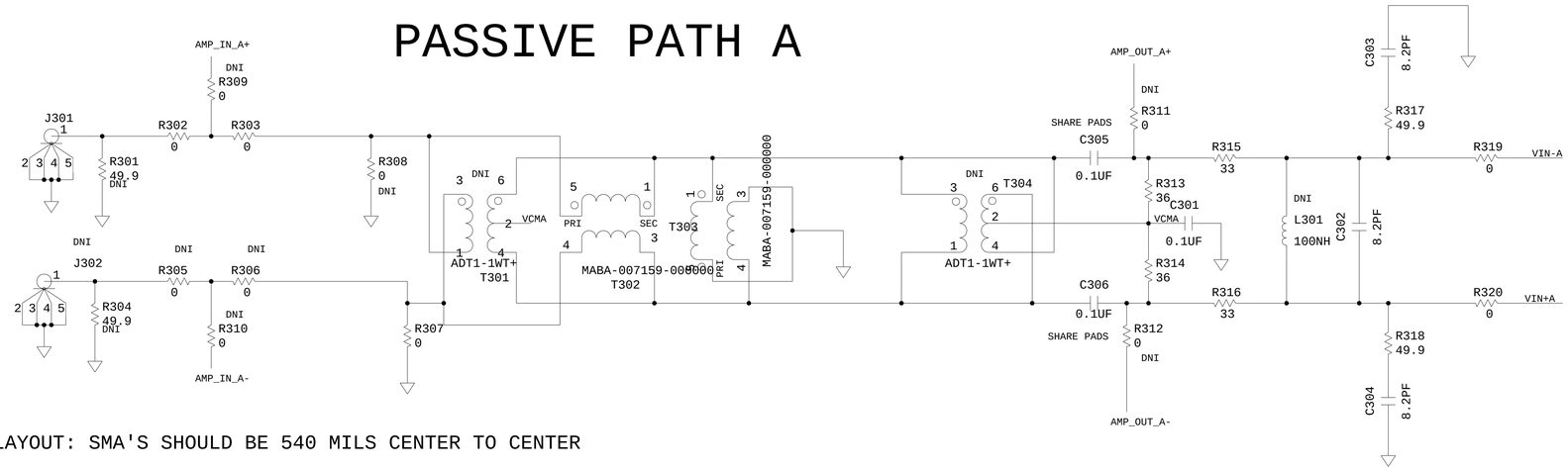

LAYOUT: SMA'S SHOULD BE 540 MILS CENTER TO CENTER

NOTE: CUTS REQ'D FOR 2ND TRANSF USE

PASSIVE PATH B

AIN_B

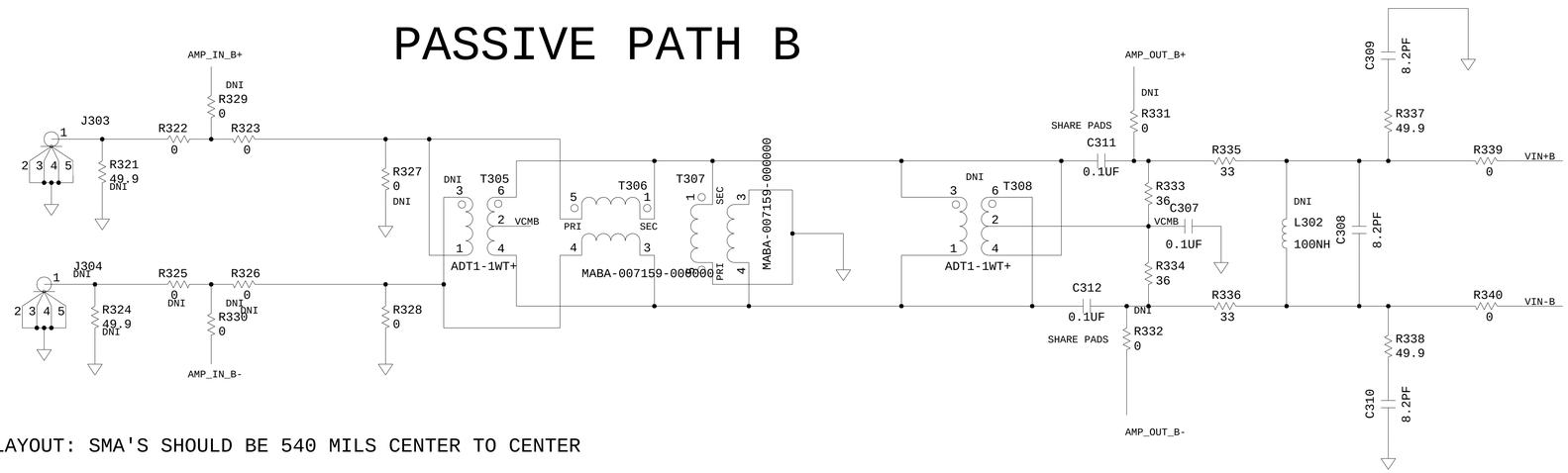

LAYOUT: SMA'S SHOULD BE 540 MILS CENTER TO CENTER

ANALOG DEVICES

THIS DRAWING IS THE PROPERTY OF ANALOG DEVICES INC. IT IS NOT TO BE REPRODUCED OR COPIED, IN WHOLE OR IN PART, OR USED IN FURNISHING INFORMATION TO OTHERS, OR FOR ANY OTHER PURPOSE DETRIMENTAL TO THE INTERESTS OF ANALOG DEVICES.
THE EQUIPMENT SHOWN HEREON MAY BE PROTECTED BY PATENTS OWNED OR CONTROLLED BY OWNED ANALOG DEVICES.

SCHEMATIC

<DRAWING_TITLE_HEADER>
AD9644
CUSTOMER BOARD

DESIGN VIEW	DRAWING NO.	REV
<DESIGN_VIEW>	9644CE01	A

PTD ENGINEER	SIZE	SCALE	SHEET 3 OF 6
-	D	NONE	

REVISIONS			
REV	DESCRIPTION	DATE	APPROVED

ACTIVE PATH - CHANNEL A AND B

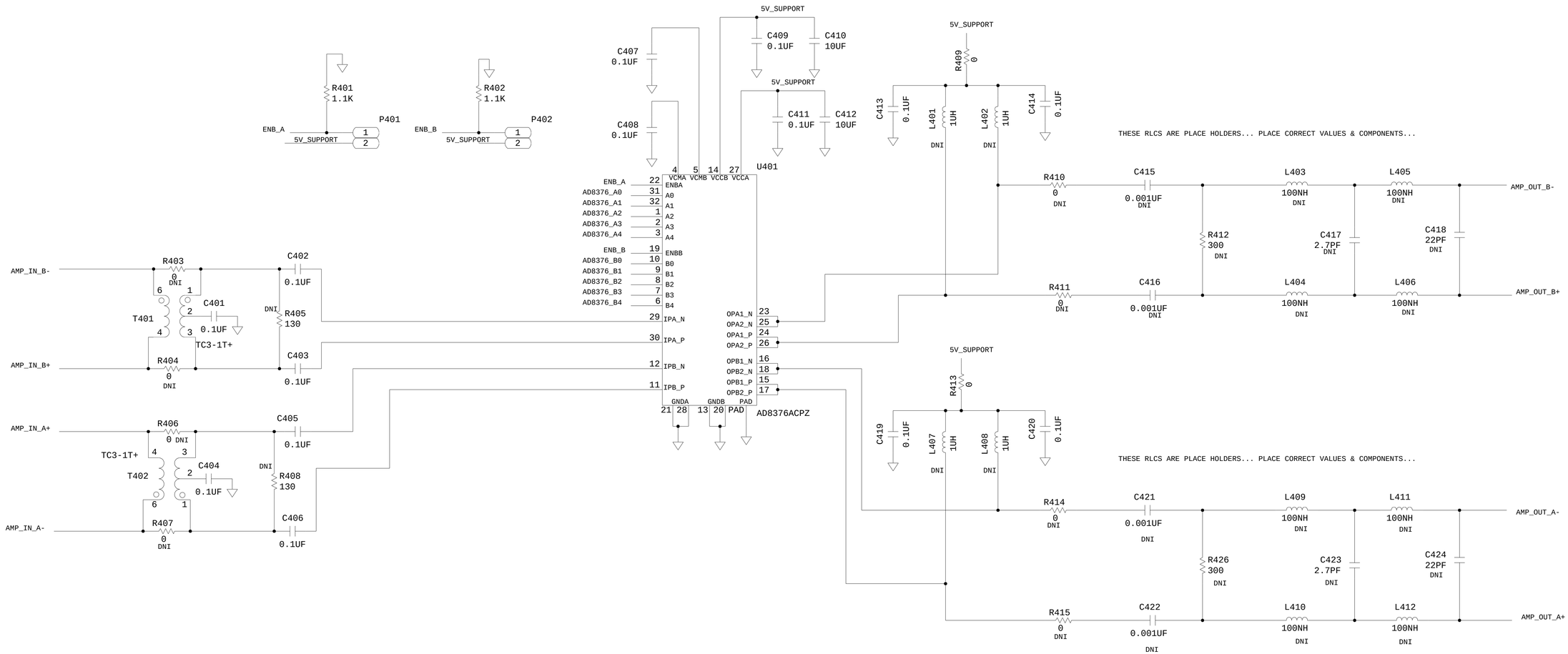

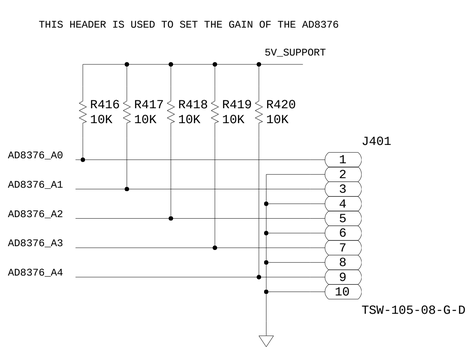

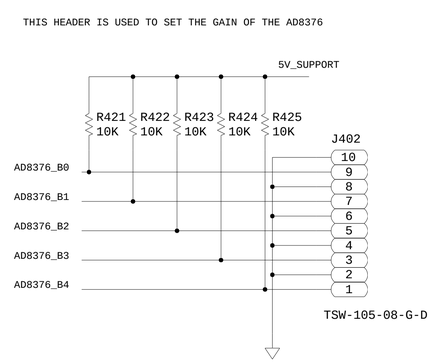

ANALOG DEVICES

THIS DRAWING IS THE PROPERTY OF ANALOG DEVICES INC. IT IS NOT TO BE REPRODUCED OR COPIED, IN WHOLE OR IN PART, OR USED IN FURNISHING INFORMATION TO OTHERS, OR FOR ANY OTHER PURPOSE DETRIMENTAL TO THE INTERESTS OF ANALOG DEVICES.
THE EQUIPMENT SHOWN HEREON MAY BE PROTECTED BY PATENTS OWNED OR CONTROLLED BY OWNED ANALOG DEVICES.

SCHEMATIC

<DRAWING_TITLE_HEADER>
AD9644
CUSTOMER BOARD

DESIGN VIEW	DRAWING NO.	REV
<DESIGN_VIEW>	9644CE01	A

PTD ENGINEER	SIZE	SCALE	SHEET 4 OF 6
-	D	NONE	

REVISIONS			
REV	DESCRIPTION	DATE	APPROVED

ACTIVE CLOCK PATH

PECL/CML/LVDS CLK CIRCUITRY

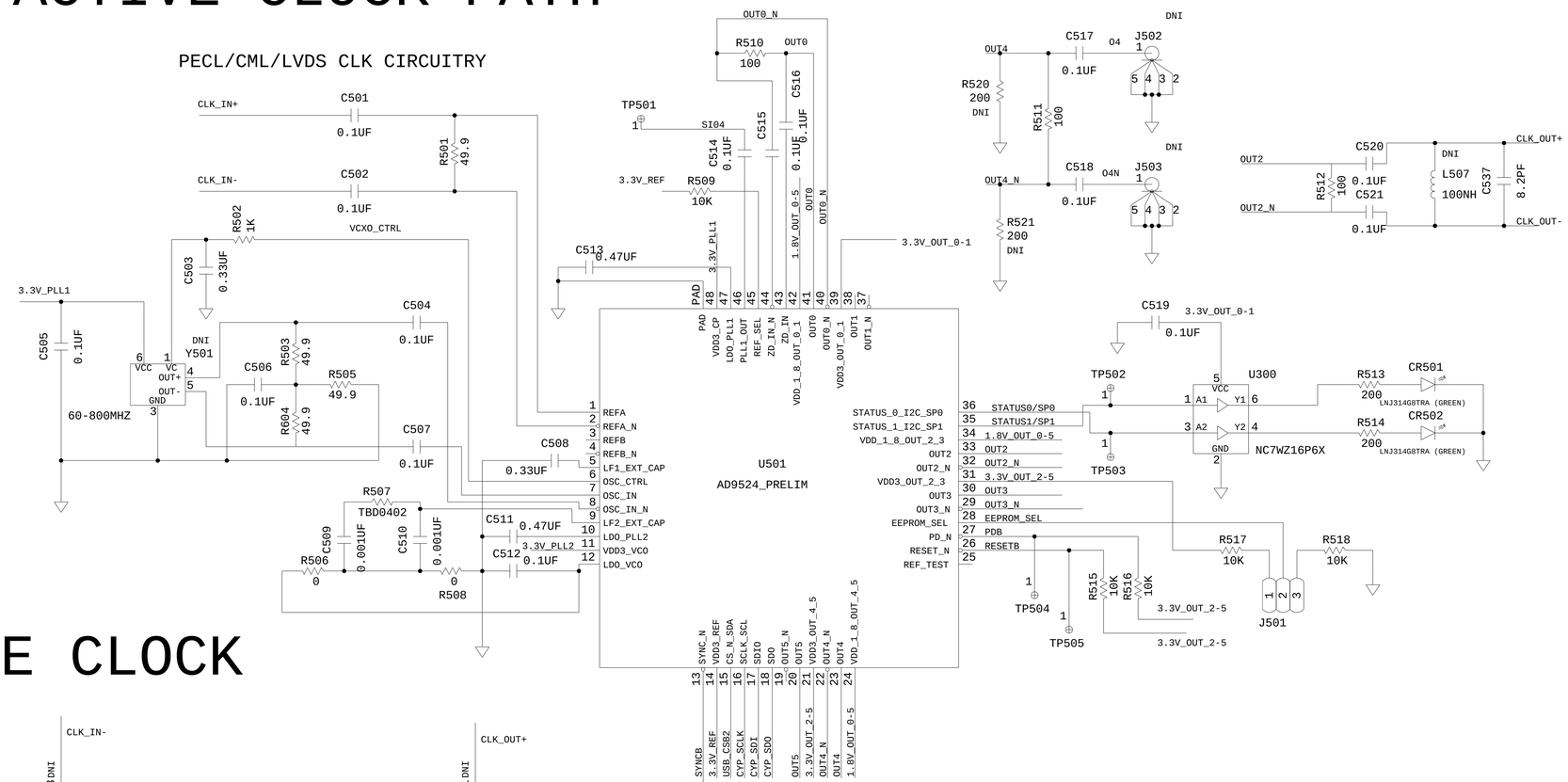

PASSIVE CLOCK

LAYOUT: SMA'S SHOULD BE 575 MILS CENTER TO CENTER
LAYOUT: SHARE PADS WITH ACTIVE CLOCK PATH R'S

CLK

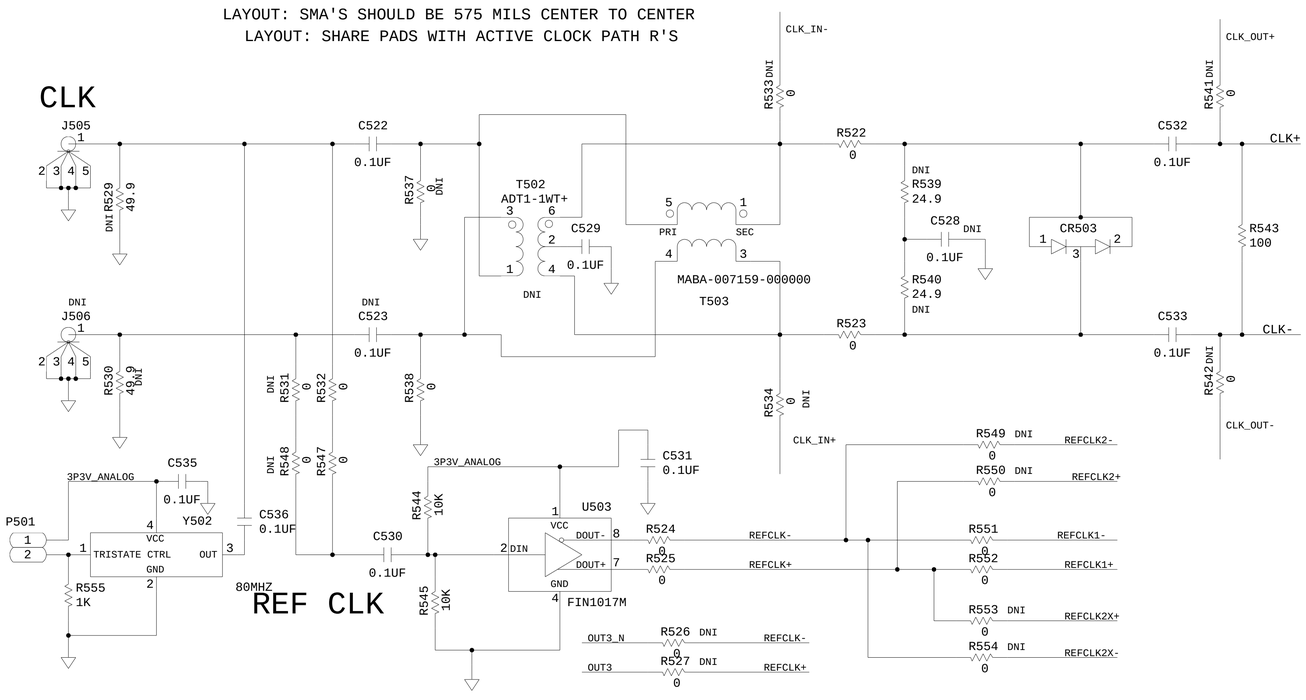

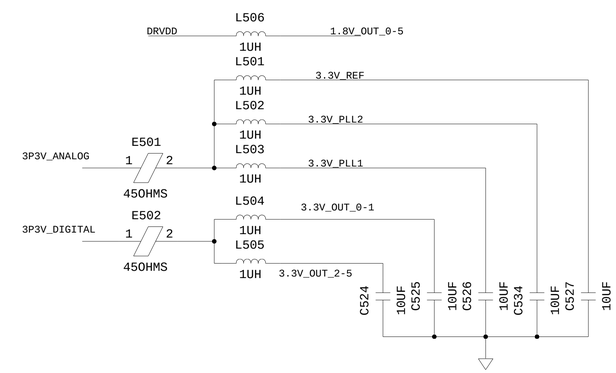

ANALOG DEVICES

THIS DRAWING IS THE PROPERTY OF ANALOG DEVICES INC. IT IS NOT TO BE REPRODUCED OR COPIED, IN WHOLE OR IN PART, OR USED IN FURNISHING INFORMATION TO OTHERS, OR FOR ANY OTHER PURPOSE DETRIMENTAL TO THE INTERESTS OF ANALOG DEVICES.
THE EQUIPMENT SHOWN HEREON MAY BE PROTECTED BY PATENTS OWNED OR CONTROLLED BY OWNED ANALOG DEVICES.

SCHEMATIC

<DRAWING_TITLE_HEADER>
AD9644
CUSTOMER BOARD

DESIGN VIEW	DRAWING NO.	REV
<DESIGN_VIEW>	9644CE01	A
PTD ENGINEER	SIZE D / SCALE NONE	SHEET 5 OF 6
-		

REVISIONS			
REV	DESCRIPTION	DATE	APPROVED

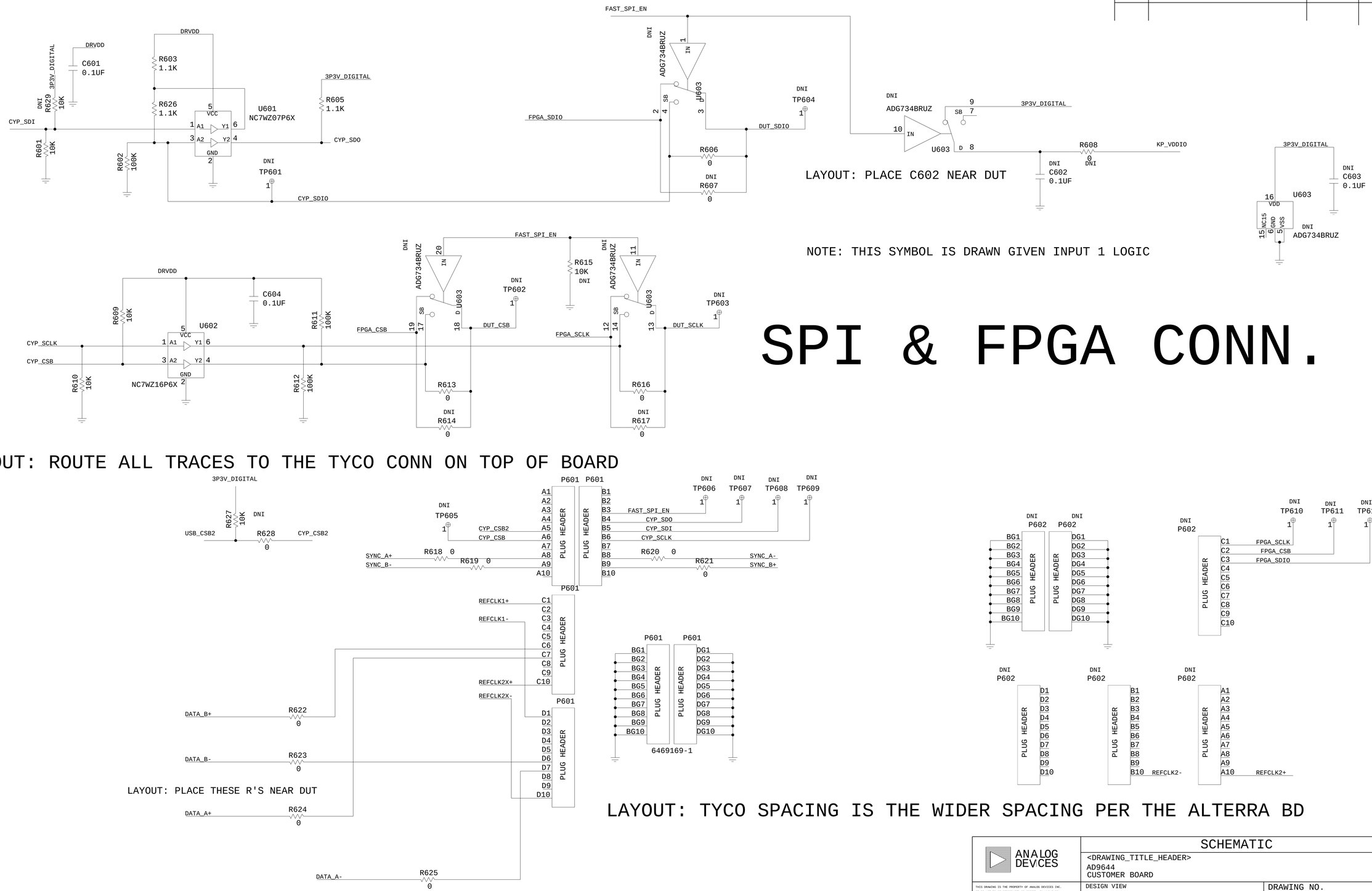

ANALOG DEVICES

SCHEMATIC

<DRAWING_TITLE_HEADER>
AD9644
CUSTOMER BOARD

THIS DRAWING IS THE PROPERTY OF ANALOG DEVICES INC. IT IS NOT TO BE REPRODUCED OR COPIED, IN WHOLE OR IN PART, OR USED IN FURNISHING INFORMATION TO OTHERS, OR FOR ANY OTHER PURPOSE DETRIMENTAL TO THE INTERESTS OF ANALOG DEVICES.
THE EQUIPMENT SHOWN HEREON MAY BE PROTECTED BY PATENTS OWNED OR CONTROLLED BY OWNED ANALOG DEVICES.

DESIGN VIEW	DRAWING NO.	REV
<DESIGN_VIEW>	9644CE01	A
PTD ENGINEER: -	SIZE: D / SCALE: NONE	SHEET 6 OF 6