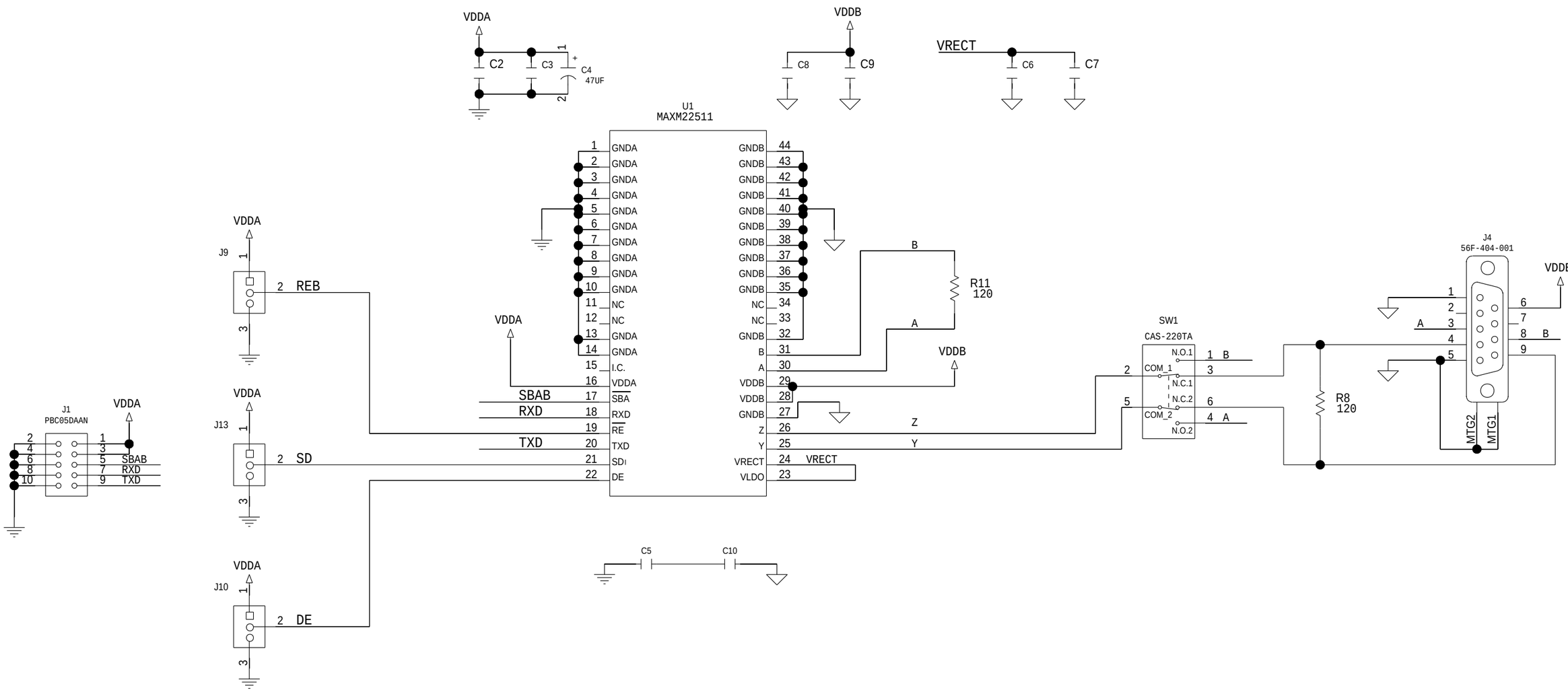

TITLE: MAXM22511 EMI BOARD, REV A	DATE: 10/17
ENGINEER: ST	PAGE: PAGE 1 OF 1