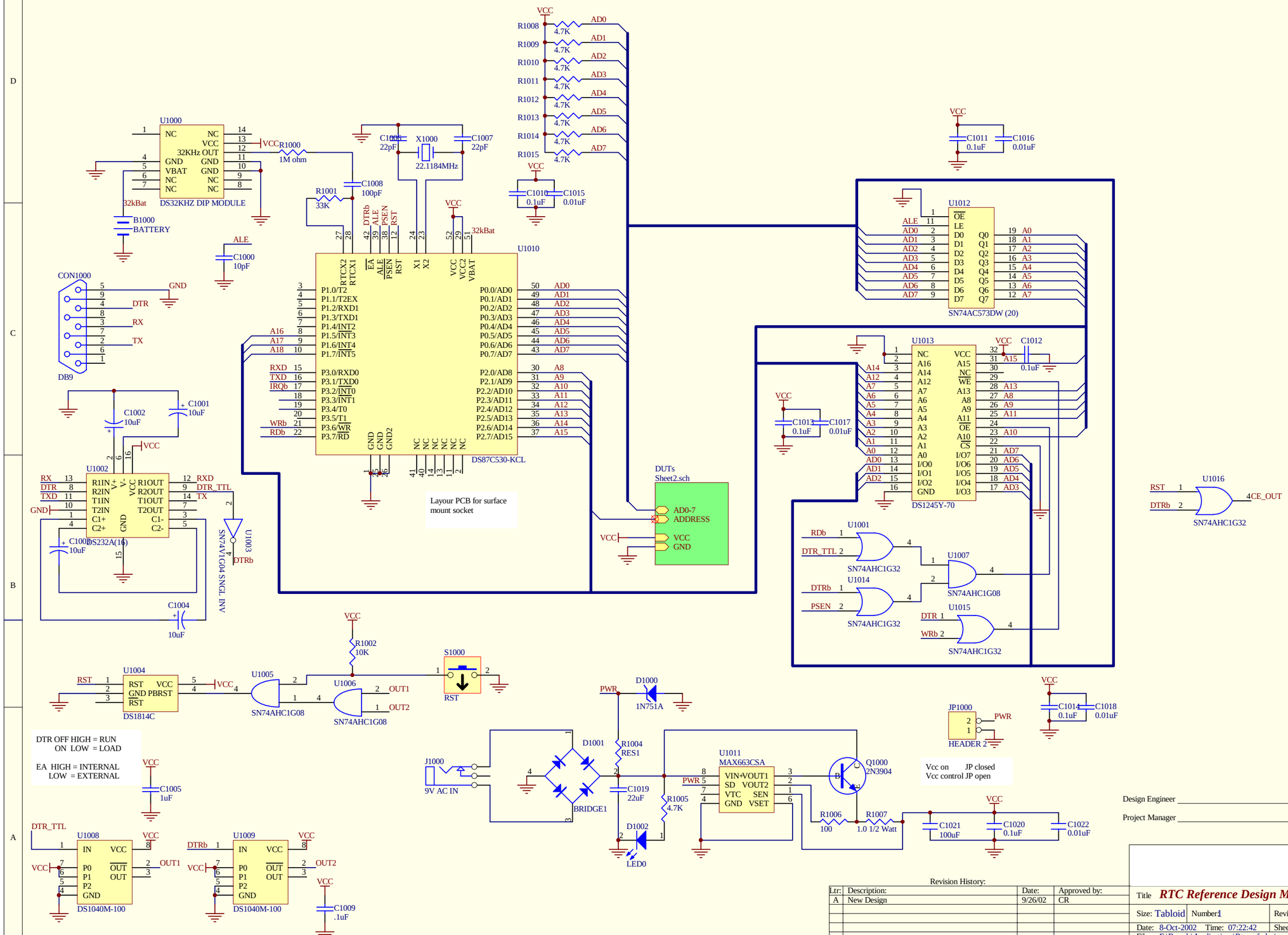
U1000
DS32KHZ DIP MODULE
32kBat
B1000
BATTERY
R1000
1M ohm
R1001
33K
C1008
100pF
C1006
22pF
X1000
22.1184MHz
C1007
22pF
C1000
10pF
ALE
CON1000
DB9
GND
DTR
RX
TX
C1002
10uF
C1001
10uF
U1002
DS232A(16)
C1003
10uF
C1004
10uF
U1003
SN74V1G04 SNGL INV
DTR_TTL
DTRb
U1010
DS87C530-KCL
Layour PCB for surface mount socket
R1008
R1009
R1010
R1011
R1012
R1013
R1014
R1015
4.7K
AD0
AD1
AD2
AD3
AD4
AD5
AD6
AD7
C1010
0.1uF
C1015
0.01uF
DUTs
Sheet2.sch
AD0-7
ADDRESS
VCC
GND
C1011
0.1uF
C1016
0.01uF
U1012
SN74AC573DW (20)
U1013
DS1245Y-70
C1013
0.1uF
C1017
0.01uF
C1012
0.1uF
U1001
U1007
U1014
U1015
SN74AHC1G32
SN74AHC1G08
U1016
CE_OUT
U1004
DS1814C
U1005
U1006
R1002
10K
S1000
RST
OUT1
OUT2
DTR OFF HIGH = RUN
ON LOW = LOAD
EA HIGH = INTERNAL
LOW = EXTERNAL
C1005
1uF
U1008
U1009
DS1040M-100
C1009
.1uF
PWR
D1000
1N751A
J1000
9V AC IN
D1001
BRIDGE1
R1004
RES1
C1019
22uF
R1005
4.7K
D1002
LED0
U1011
MAX663CSA
Q1000
2N3904
R1006
100
R1007
1.0 1/2 Watt
C1021
100uF
C1020
0.1uF
C1022
0.01uF
JP1000
HEADER 2
C1014
0.1uF
C1018
0.01uF
Vcc on JP closed
Vcc control JP open
Design Engineer
Project Manager
Date
Revision History:
Ltr: A
Description: New Design
Date: 9/26/02
Approved by: CR
Title RTC Reference Design Micro. Inf.
Size: Tabloid
Number 1
Revision:
Date: 8-Oct-2002 Time: 07:22:42
Sheet 1 of 2
File: F:\Boards\Applications\Rtc_ref_design.ddb - Documents\Sheet1.Sch