REVISION RECORD			
LTR	ECO NO:	APPROVED:	DATE:
A	Initial Release		1/15/2008
B	R13=165, C6=2.7uF, R14=R2=1k, C34=10nF, C16=4.7uF		1/21/2008

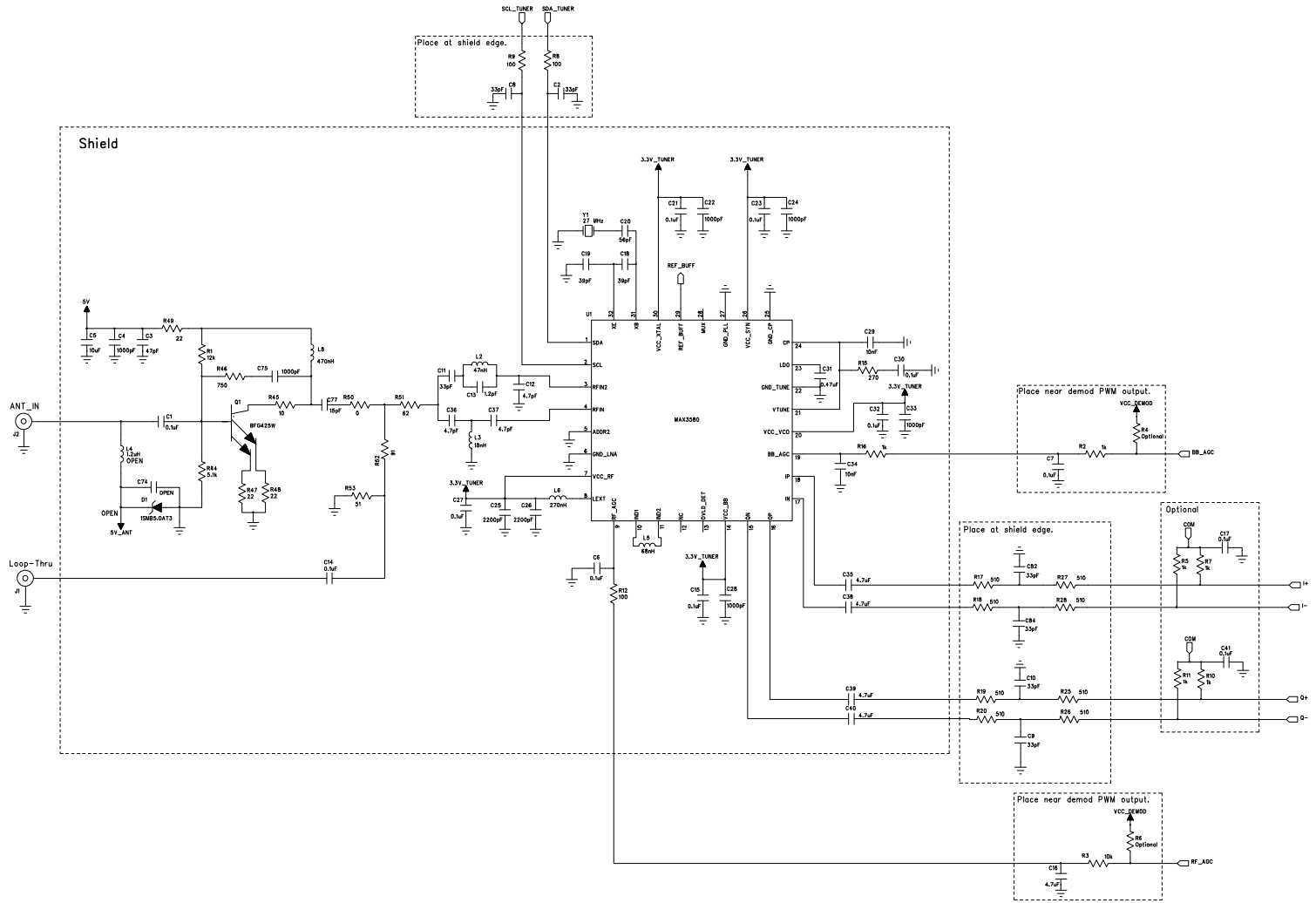

Maxim Confidential

DRAWN: Bryan Irons	DATED: 1/21/2008	TITLE: MAX3580 with Loop-Thru and Dual Loop AGC Control		
CHECKED:	DATED:	CODE:	SIZE:	DRAWING NO:	REV: 1B
QUALITY CONTROL:	DATED:				
RELEASED:	DATED:	SCALE:		SHEET: 1 OF 1	