IMPORTANT NOTES:

DO NOT CONNECT PINS 61, 62.
R12 IS CRITICAL COMPONENT AND MUST BE 12.4K OHM, 1%, 100PPM/c.
PIN 1 SEPARATELY FILTERED FROM OTHER VDD18 PINS.

NO LOAD (OR NL): DO NOT INSTALL COMPONENT (PCB CONTAINS LAYOUT FOR COMPONENT)

NO LOAD COMPONENTS ARE RECOMMENDED FOR PROTOTYPE DEVELOPMENT AND MAY NOT BE NEEDED FOR FINAL DESIGN.

DEFAULT CONFIGURATION FOR DELAY COMPONENT (DL246) IS 4NS.

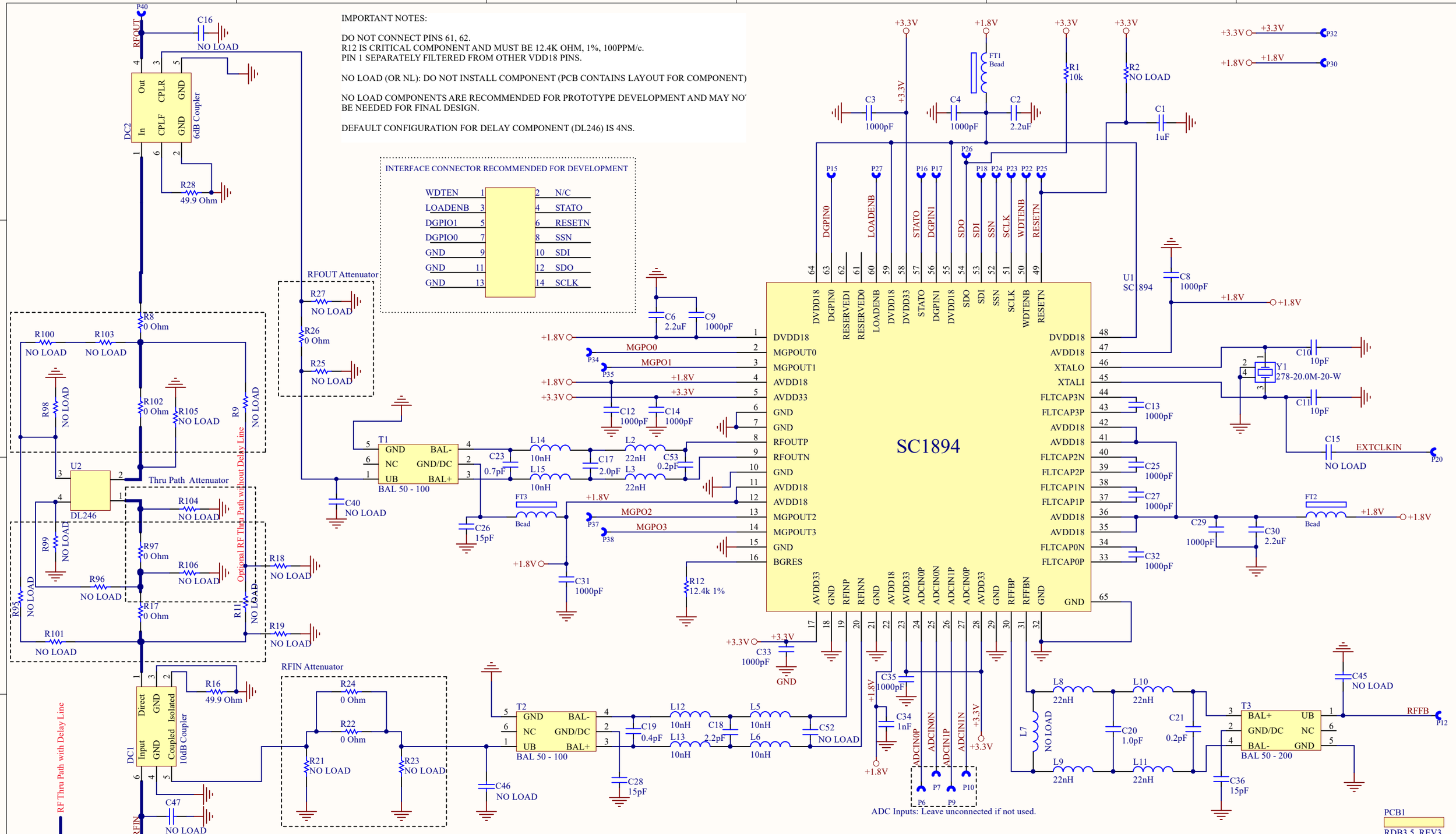

"This document contains confidential information proprietary to Maxim Integrated Products, Inc., and is provided under a non-disclosure agreement. Unauthorized copying or distribution is prohibited. Maxim Integrated and Maxim Integrated logo are trademarks of Maxim Integrated Products, Inc. All other trademarks are the property of their respective owners. No circuit patent licenses are implied. Maxim Integrated Products, Inc. reserves the right to change its product specifications at any time. © 2014, Maxim Integrated Products, Inc. All Rights Reserved."

Title	SC1894-DB900A (698 - 960 MHz)		Maxim Integrated 160 Rio Robles San Jose, CA. 95134 U.S.A. 408-601-1000
Size: B	Number:*	Revision 2.0	
Date: 6/5/2020	Time: *	Sheet 1 of 1	
File: SC1894-DB900A.SchDoc			