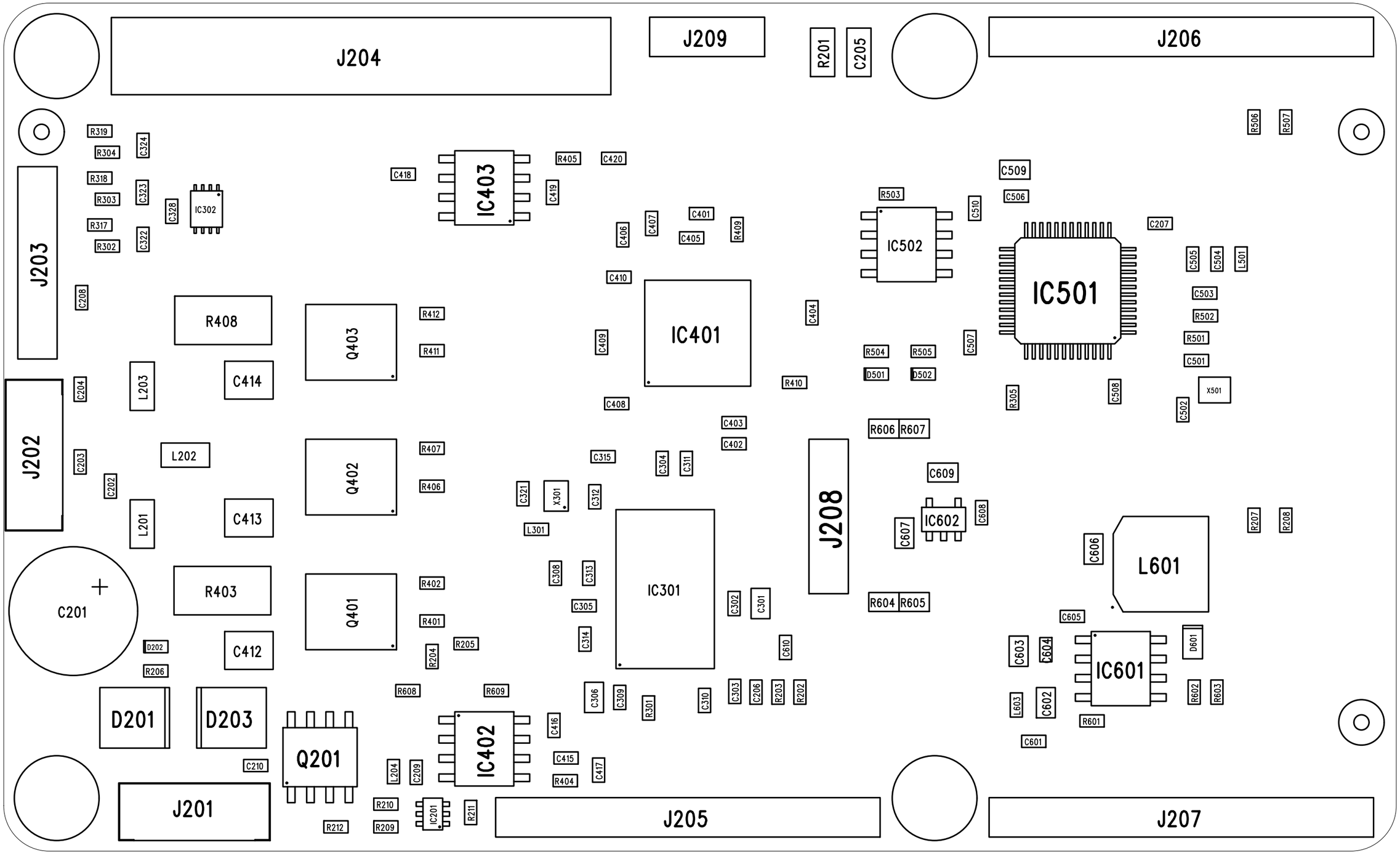
J204
J209
R201
C205
J206
R506
R507
R319
C324
R304
R318
C323
R303
C328
IC302
R317
C322
R302
J203
C208
R408
Q403
R412
R411
C414
L203
C204
J202
C203
L202
Q402
R407
R406
C202
L201
C413
C201
R403
Q401
R402
R401
D202
R206
C412
R205
R204
D201
D203
Q201
C210
J201
R212
R210
R209
IC201
R211
L204
C209
IC402
R608
R609
C416
C415
R404
C417
C418
IC403
R405
C420
C419
C406
C407
C401
C405
R409
C410
IC401
C409
C408
R410
C404
C403
C402
C315
C304
C311
C321
X301
C312
L301
C308
C313
C305
C314
IC301
C302
C301
C306
C309
R301
C310
C303
C206
R203
R202
J208
C509
C506
R503
IC502
C510
C207
IC501
C505
C504
L501
C503
R502
R501
C501
R504
R505
C507
D501
D502
R410
R305
C508
X501
C502
R606
R607
C609
IC602
C608
C607
C606
L601
R207
R208
R604
R605
C605
C603
C604
IC601
D601
L603
C602
R601
R602
R603
C601
J205
J207