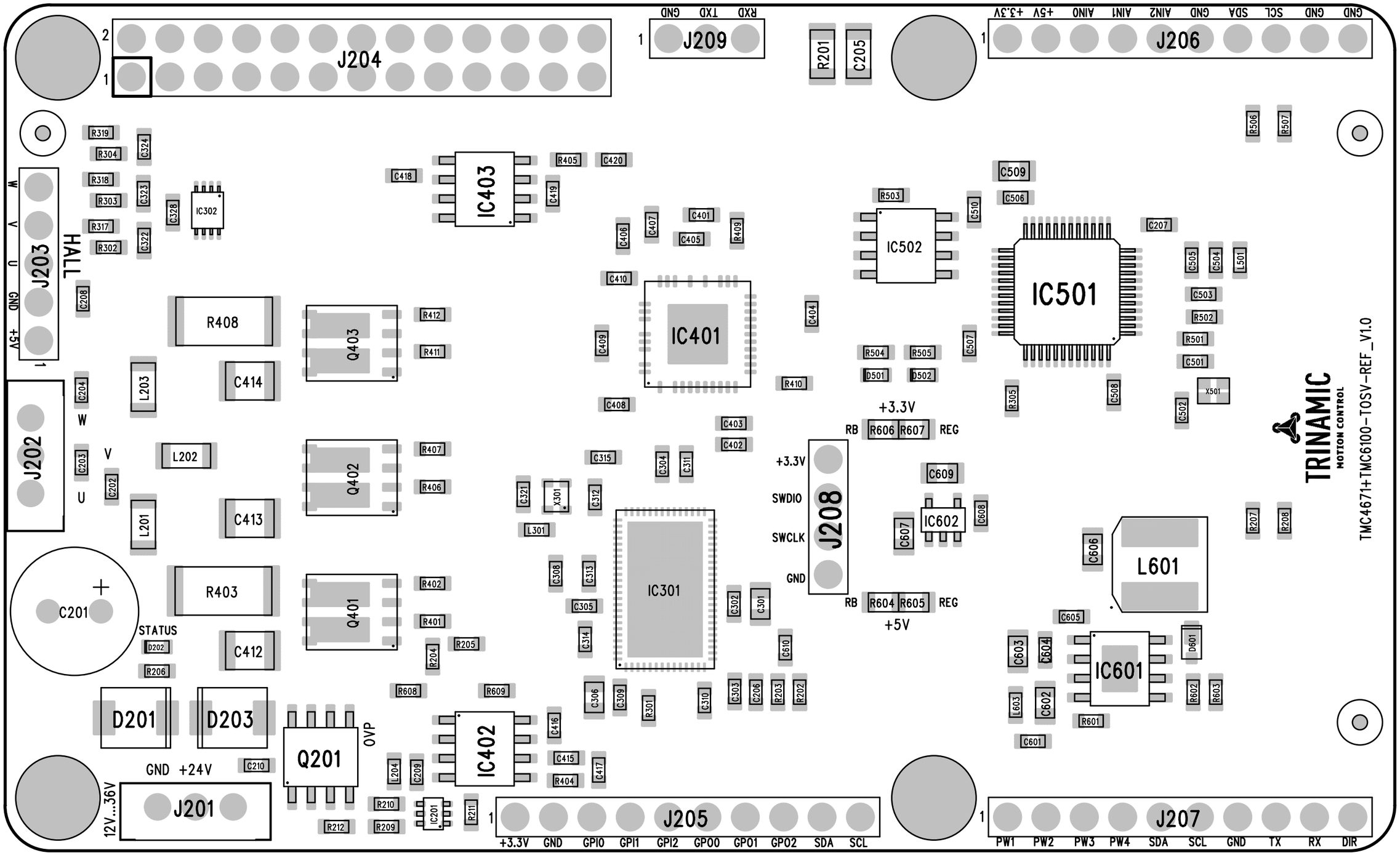
J204
J209
RXD TXD GND
J206
GND GND SCL SDA GND AIN2 AIN1 AIN0 +5V +3.3V
R201
C205
J203
W V U GND +5V
HALL
J202
W V U
IC302
IC403
IC401
IC502
IC501
R408
C414
L203
Q403
Q402
Q401
L202
C413
L201
R403
C412
C201
STATUS
D202
R206
D201
D203
Q201
OVP
GND +24V
J201
12V...36V
IC402
IC201
J205
+3.3V GND GPIO GPI1 GPI2 GPO0 GPO1 GPO2 SDA SCL
J208
+3.3V
SWDIO
SWCLK
GND
RB R606 R607 REG
+3.3V
RB R604 R605 REG
+5V
IC602
L601
IC601
J207
PW1 PW2 PW3 PW4 SDA SCL GND TX RX DIR
TRINAMIC
MOTION CONTROL
TMC4671+TMC6100-TOSV-REF_V1.0