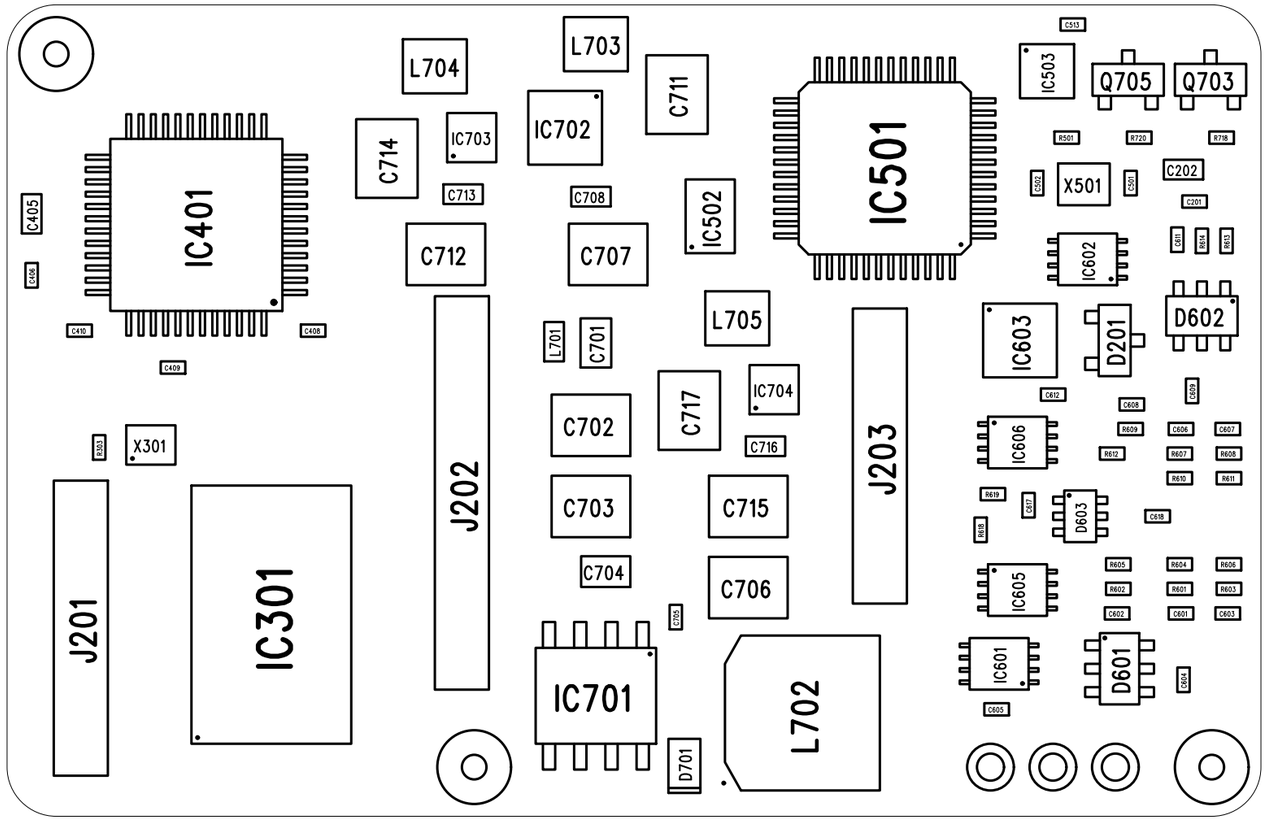
IC401
C405
C406
C410
C408
C409
L704
C714
IC703
C713
C712
J202
L703
IC702
C708
C707
C711
IC502
IC501
L701
C701
L705
C702
C717
IC704
C716
C703
C715
C704
C706
D702
IC701
D701
L702
J203
IC503
Q705
Q703
R501
R720
R718
X501
C502
C501
C202
C201
IC602
R604
R603
IC603
D201
C612
C608
C609
IC606
R609
C606
C607
R612
R607
R608
R610
R611
R619
C607
D603
C618
R618
IC605
R605
R604
R606
R602
R601
R603
C602
C601
C603
IC601
D601
C605
C604
X301
R303
J201

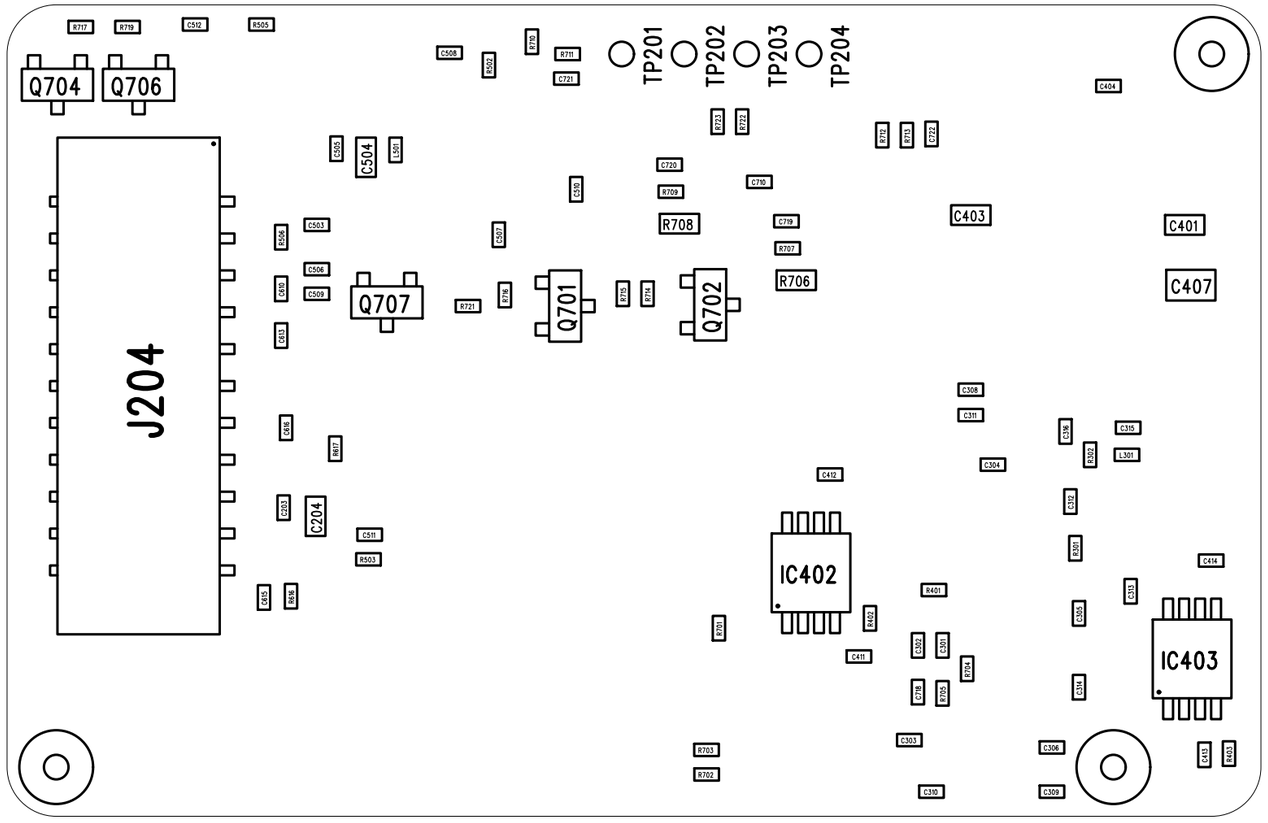
Q704
Q706
J204
C504
Q707
Q701
Q702
TP201
TP202
TP203
TP204
R708
R706
C403
C401
C407
C204
IC402
IC403