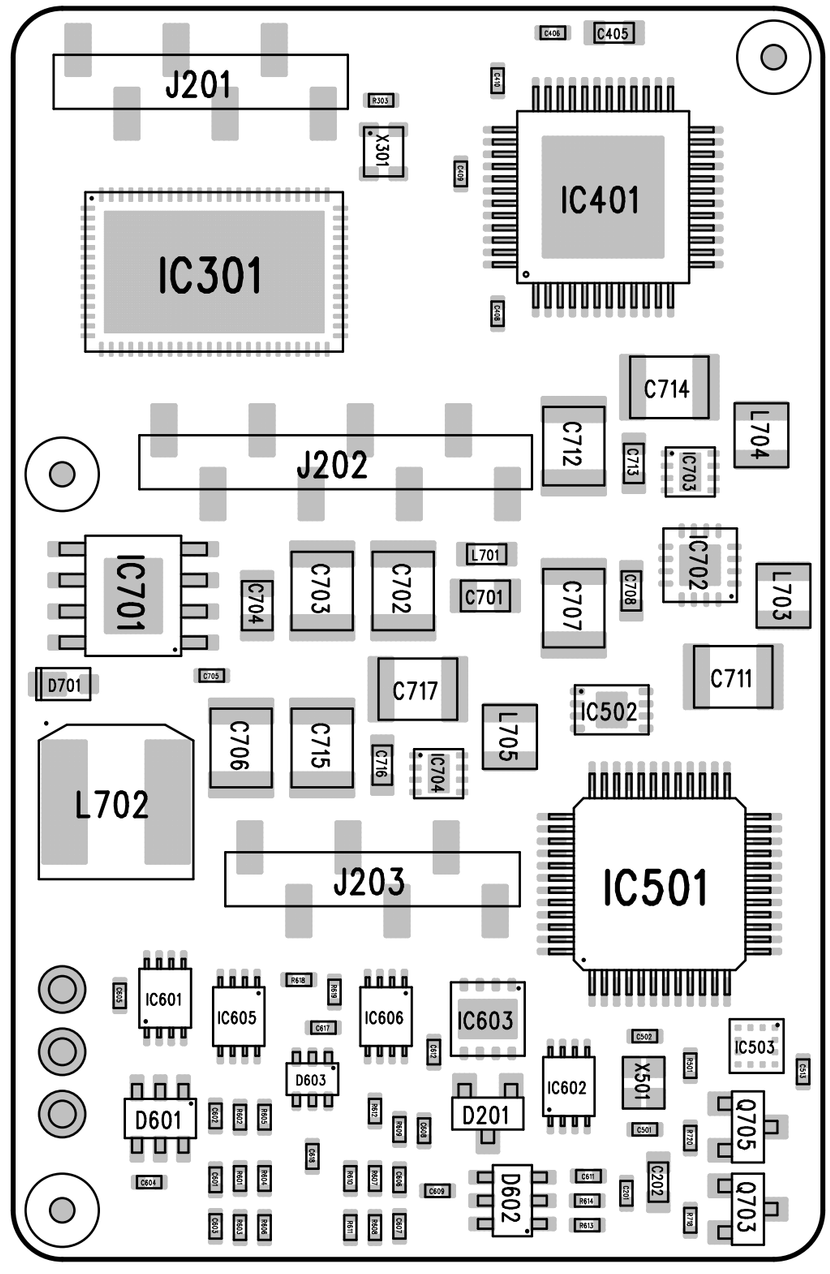
J201
R303
X301
C408
C405
C406
C409
IC401
IC301
C410
C714
L704
C712
C713
IC703
J202
IC702
L703
IC701
C704
C703
C702
L701
C701
C707
C708
D701
C705
C717
C711
IC502
L705
C706
C715
C716
IC704
L702
J203
IC501
IC601
IC605
R618
R619
IC606
IC603
C617
C602
IC503
C503
D603
IC602
X501
C502
R601
D601
C605
R605
R607
C608
D201
Q705
C601
R604
C606
R603
R606
C607
C609
D602
C611
R614
R613
C202
Q703
R612